DS-2CD1643G0-I(Z)
4 MP EXIR VF Bullet Network Camera

Key Features

- 1/3" progressive scan CMOS
- 2560 × 1440@20fps
- 2.8 mm to 12 mm varifocal lens
- H.265+, H.265, H.264+, H.264
- Color: 0.01 Lux @ (F1.2, AGC ON), 0.018 Lux @ (F1.6, AGC ON)
- BLC/3D DNR/ROI
- Up to 30 m IR range
- IP67
- 120 dB WDR
- Built-in micro SD/SDHC/SDXC card slot, up to 128 GB

Specification

Camera	
Image Sensor	1/3" Progressive Scan CMOS
Min. Illumination	Color: 0.01 Lux @(F1.2, AGC ON), 0.018 Lux @ (F1.6, AGC ON)
Shutter Speed	1/3 s to 1/100, 000 s, support slow shutter
Slow Shutter	Yes
Auto-Iris	No
Day & Night	IR cut filter
Digital Noise Reduction	3D DNR
WDR	120 dB
Angle Adjustment	Pan: 0° to 360°, tilt: 0° to 90°, rotation: 0° to 360°
Lens	
Focal Length	2.8 to 12 mm
Aperture	F1.6
Focus	-I: Manual -IZ: Auto
FOV	Horizontal field of view: 98° to 28° Vertical field of view: 51° to 16° Diagonal field of view: 115° to 32°
Lens Mount	Φ14
IR	
IR Range	Up to 30 m
Wavelength	850 nm
Compression Standard	
Video Compression	Main stream: H.265/H.264 Sub-stream: H.265/H.264/MJPEG
H.264 Type	Baseline Profile/Main Profile/High Profile
H.264+	Main stream supports
H.265 Type	Main Profile
H.265+	Main stream supports
Video Bit Rate	32 Kbps to 8 Mbps
Smart Feature-set	
Region of Interest	1 fixed region for main stream and sub-stream
Image	
Max. Resolution	2560 × 1440
Main Stream Max. Frame Rate	50Hz: 20fps (2560 × 1440), 25fps (2304 × 1296, 1920 × 1080, 1280 × 720) 60Hz: 20fps (2560 × 1440), 30fps (2304 × 1296, 1920 × 1080, 1280 × 720)
Sub-stream Max. Frame Rate	50Hz: 25fps (640 × 480, 640 × 360, 320 × 240) 60Hz: 30fps (640 × 480, 640 × 360, 320 × 240)
Image Enhancement	BLC, 3D DNR
Image Settings	Saturation, brightness, contrast, sharpness, AGC, white balance adjustable by client software or web browser
Day/Night Switch	Auto, scheduled
Network	
Network Storage	Support Micro SD/SDHC/SDXC card (128G), local storage and NAS (NFS,SMB/CIFS), ANR
Alarm Trigger	Motion detection, video tampering alarm, network disconnected, IP address conflicted, illegal login
Protocols	TCP/IP, ICMP, HTTP, HTTPS, FTP, DHCP, DNS, DDNS, RTP, RTSP, RTCP, NTP, UPnP™, SMTP, IGMP,

	802.1X, QoS, IPv6, UDP, Bonjour
General Function	One-key reset, anti-flicker, heartbeat, mirror, password protection, privacy mask, watermark
Firmware Version	5.5.3
API	ONVIF (PROFILE S, PROFILE G), ISAPI
Simultaneous Live View	Up to 6 channels
User/Host	Up to 32 users 3 levels: Administrator, Operator and User
Client	iVMS-4200, iVMS-4500, iVMS-5200
Web Browser	IE8+, Chrome 31.0-44, Firefox 30.0-51, Safari 8.0+
Interface	
Communication Interface	1 RJ45 10M/100M self-adaptive Ethernet port
Video Output (Without -Z)	1Vp-p composite output (75 Ω/BNC)
Reset Button	Yes
General	
Operating Conditions	-30 °C to 60 °C (-22 °F to 140 °F), humidity: 95% or less (non-condensing)
Power Supply	12 VDC ± 20%, 5.5 mm coaxial power plug PoE (802.3af, class 3)
Power Consumption and Current	-IZ: 12 VDC, 0.9 A, max. 11 W; PoE: (802.3af, 36 V to 57 V), 0.4 A to 0.2 A, max. 12.9 W -I: 12 VDC, 0.6 A, max. 7 W; PoE: (802.3af, 36 V to 57 V), 0.3 A to 0.1 A, max. 9 W
Protection Level	IP67 TVS 2000V lightning protection, surge protection and voltage transient protection
Material	Metal
Dimensions	105 mm × 105 mm × 145 mm (4.1" × 4.1" × 5.7")
Weight	Camera: approx. 1035 g (2.3 lb.) With package: approx. 1550 g (3.4 lb.)

Available Models

DS-2CD1643G0-I (2.8 mm to 12 mm), DS-2CD1643G0-IZ (2.8 mm to 12 mm)

Dimension

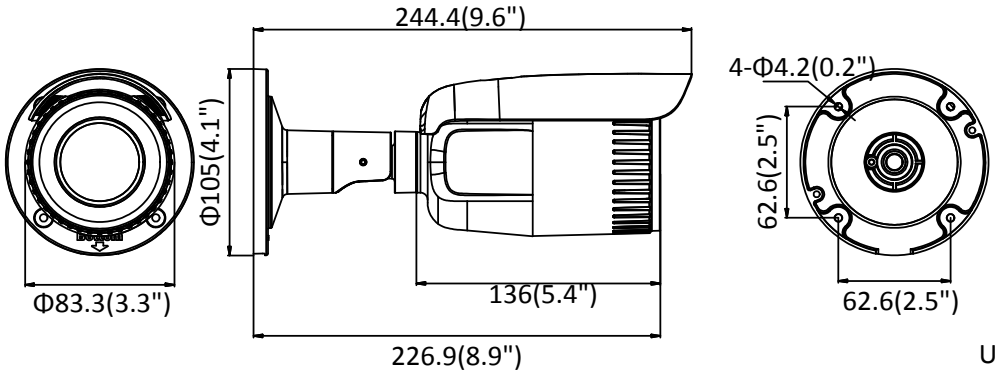

Unit: mm

Accessory

DS-1260ZJ

Distributed by

Headquarters
No.555 Qianmo Road, Binjiang District,
Hangzhou 310051, China
T +86-571-8807-5998
overseasbusiness@hikvision.com

Hikvision USA
T +1-909-895-0400
sales.usa@hikvision.com

Hikvision Europe
T +31-23-55-42-770
info.eu@hikvision.com

Hikvision Middle East
T +971-4-8816086
salesme@hikvision.com

Hikvision Russia
T +7-495-669-67-99
saleru@hikvision.com

Hikvision India
T +91-22-28469900
sales@pramahikvision.com

Hikvision Italy
T +39-0438-6902
info.it@hikvision.com

Hikvision France
T +33(0)1-85-330-450
info.fr@hikvision.com

Hikvision Spain
T +34-91-737-16-55
info.es@hikvision.com

Hikvision Poland
T +48-22-460-01-50
poland@hikvision.com

Hikvision UK
T +01628-902140
support.uk@hikvision.com

Hikvision Singapore
T +65-6684-4718
sg@hikvision.com

Hikvision Oceania
T +61-2-8599-4233
salesau@hikvision.com

Hikvision Canada
T +1-909-895-0400
sales.usa@hikvision.com

Hikvision Korea
T +82-31-731-8841
sales.korea@hikvision.com

Hikvision Brazil
T +55 11 3318-0050
Latam.support@hikvision.com

Hikvision Africa
T +27 (10) 0351172
sale.africa@hikvision.com

Hikvision Hong Kong
T +852-2151-1761

© Hikvision Digital Technology Co., Ltd. 2016 | Data subject to change without notice |

05050320171229